CLA-VAL™

— MODEL — 352GF

Hydrant Pit Valve

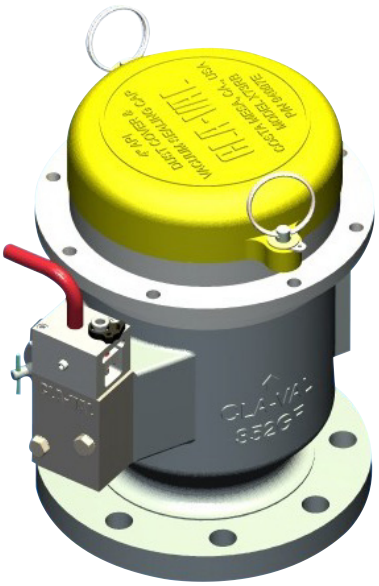

- **Complies with EI Specification 1584 Third Edition**
- **Pneumatic or Manual Deadman operated**
- **Optional Emergency Air Release Lanyard for the Pneumatic Deadman Version**
- **Optional Excess Flow Shut-off for Both the Pneumatic and Manual Deadman Versions**
- **Body of Ductile Iron and Stainless Steel – No Aluminum**
- **Operating Temperature: -40 to + 140 F**
- **Fits Within 13 Inch Diameter Pits**
- **Three Year Warranty**

The Model 352GF Hydrant Pit Valve is a piston style, Deadman operated on / off valve designed for use in aircraft refueling hydrant systems. The Model 352GF Hydrant Pit Valve can be ordered with either a Manual Deadman Pilot or a Pneumatic Deadman Pilot. When fitted with a Pneumatic Pilot, an optional Emergency Air Release Lanyard Manual override can be added to provide a way to close the Pit Valve even with Deadman air pressure actively applied.

The outlet of the Model 352GF Hydrant Pit Valve can be connected to by any 4 inch API hydrant pit coupler, such as the Cla-Val Model 351GF-15 Hydrant Coupler and 353GF Pressure Control Coupler. It complies with the requirements of EI Specification 1584 Third Edition. The upper API Body of the Model 352GF Hydrant Pit Valve is made of hardened Stainless Steel. The lower body is made of Ductile Iron. Aluminum is not used for these critical pressure containing components.

It incorporates a servicing valve which allows for the removal of the pilot for service without the need to de-pressurize the delivery system. The Model 352GF Hydrant Pit Valve is small enough to fit into a 13 inch pit box with the use of an offset adapter plate.

Dimensions (inches)

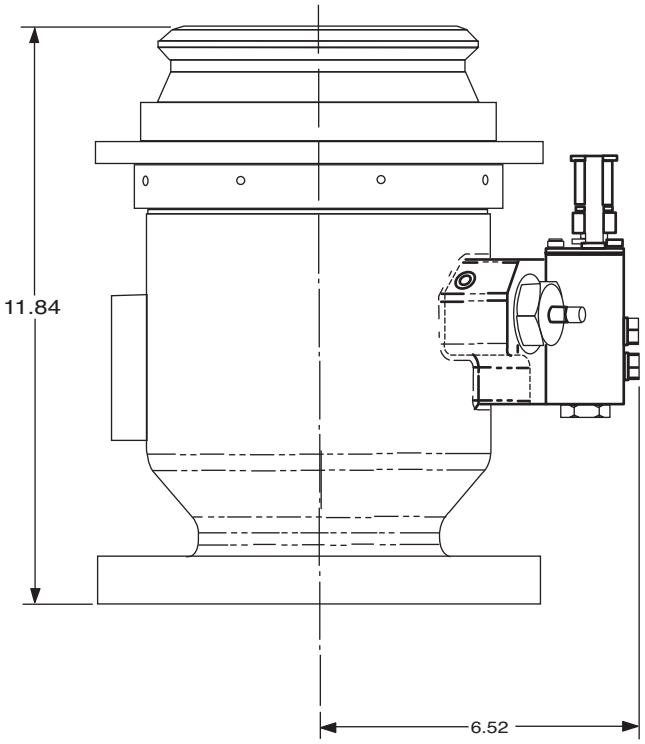

CLA-VAL 1701 Placentia Ave • Costa Mesa CA 92627 • Phone: 949-722-4800 • Fax: 949-548-5441 • E-mail: info@cla-val.com • www.cla-val.com
©Copyright Cla-Val 2015 • Printed in USA • Specifications subject to change without notice.

— MODEL — **352GF**

Hydrant Pit Valve

Materials Specification

Body Material	Ductile Iron ASTM A536 65-45-12
API Adapter	Stainless Steel (Grade 410 - hardened to Brinnell 345/365)
Pilot Valve	Aluminum
Seals	Nitrile and Fluorocarbon
Poppet	Hard Anodized Aluminum
Piston	Stainless Steel
Dust Cap	Polyurethane Company
Corrosion Protection	Electroless Nickel-Plated to MIL-C-26047 (4 to 6mm penetration)

Warranty: Three Years

CLA-VAL WARRANTY

3 Year Warranty on Cla-Val Quality Products

This is a Limited Warranty

Automatic valves and controls as manufactured by Cla-Val are warranted for three years from date of shipment against manufacturing defects in material and workmanship that develop in the service for which they are designed, provided the products are installed and used in accordance with all applicable instructions and limitations issued by Cla-Val. Electronic components manufactured by Cla-Val are warranted for one year from the date of shipment.

We will repair or replace defective material, free of charge which is returned to our factory, transportation charges prepaid, provided that after inspection the material is found to have been defective at time of shipment.

The warranty is expressly conditioned on the purchaser's giving Cla-Val immediate written notice upon discovery of the defect.

Components used by Cla-Val, but manufactured by others, are warranted only to the extent of that manufacturer's guarantee.

This warranty shall not apply if the product has been altered or repaired by others, and Cla-Val shall make no allowance or credit for such repairs or alterations unless authorized in writing by Cla-Val.

Disclaimer of Warranties & Limitation of Liability

The foregoing warranty is exclusive and in lieu of all other warranties and representations whether expressed, implied, oral or written, including but not limited to, any implied warranties or merchantability or fitness for a particular purpose. All such other warranties and representations are hereby cancelled.

Cla-Val shall not be liable for any incidental or consequential loss, damage or expense arising directly or indirectly from the use of the product. Cla-Val shall not be liable for any damages or charges for labor or expense in making repairs or adjustments to the product. Cla-Val shall not be liable for any damages or charges sustained in the adaptation or use of its engineering data and services.

No representative of Cla-Val may change any of the foregoing or assume any additional liability or responsibility in connection with the product.

The liability of Cla-Val is limited to material replacements F.O.B. Newport Beach, California.

CLA-VAL
P.O Box 1305
Newport Beach CA
92658-0305
Phone: 949-722-4800
Fax: 949-548-5441
E-mail: claval@cla-val.com

CLA-VAL CANADA
4687 Christie Drive
Beaumeville, Ontario
Canada L0R 1B4
Phone: 905-563-4963
Fax: 905-563-4040
E-mail: sales@cla-val.ca

CLA-VAL EUROPE
Chemin des Mésanges 1
CH-1032 Romanel
Lausanne, Switzerland
Phone: 41-21-643-15-55
Fax: 41-21-643-15-50
E-mail: cla-val@cla-val.ch

CLA-VAL UK
Dainton House, Grade Station Road
GB - Tuttlebee Walk
Kent TN1 2 DH England
Phone: 44-1892-514-450
Fax: 44-1892-543-423
E-mail: info@cla-val.co.uk

CLA-VAL FRANCE
Parlée du Grand Lyon 1
ZAC du Champ du Pelier
FR - 01700 Neyron
Phone: 33-4-72-25-90-93
Fax: 33-4-72-25-04-17
E-mail: cla-val@cla-val.fr

Ordering Information

Option letters and numbers may be combined with the basic unit, except as noted, to customize the valve to fit specific installation requirements.

Option	Description
4	Pit Valve 4” Inlet ANSI 150
6	Pit Valve 6” Inlet ANSI 150
A	Air Pilot
D	Air Pilot with Defuel
F	Fusible Plug Assembly
M	Manual Pilot
O	Air Release
R	Adapter Assembly 4” X 6”
S4	Stone Guard 4” with Snap Ring
S6	Stone Guard” with Snap Ring
I	20 Mesh Strainer 4” and 6”

Ordering Example

Model # 352GF-4AOS4

Standard pit valve with 4” inlet flange ANSI 150 with pneumatic operated pilot valve and lanyard override s/w stone guard on inlet

Typical Application

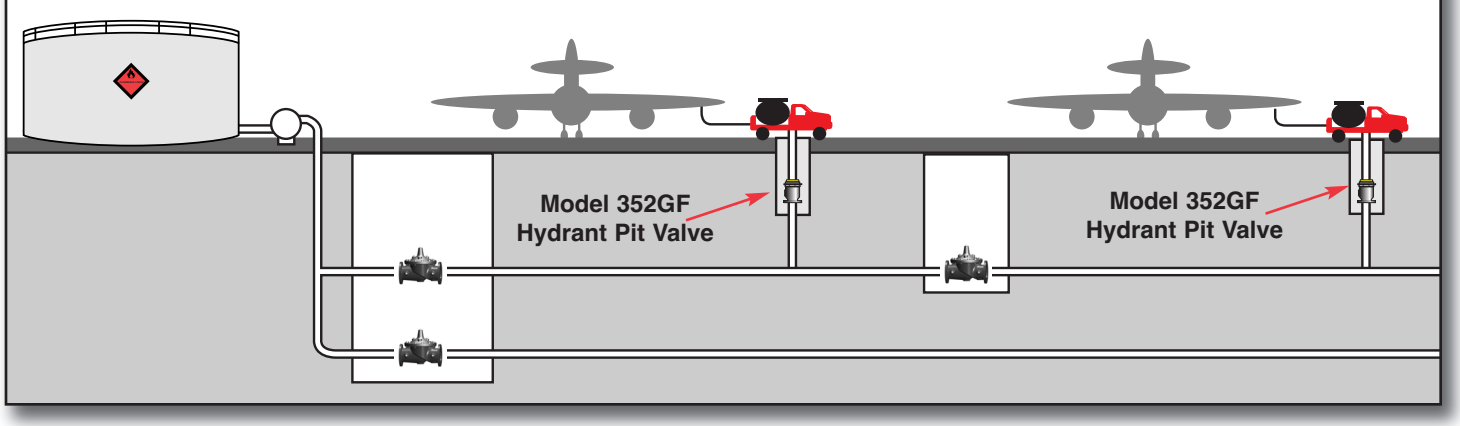

©Copyright Cla-Val 2015 • Printed in USA • Specifications subject to change without notice.